8ft Stretch

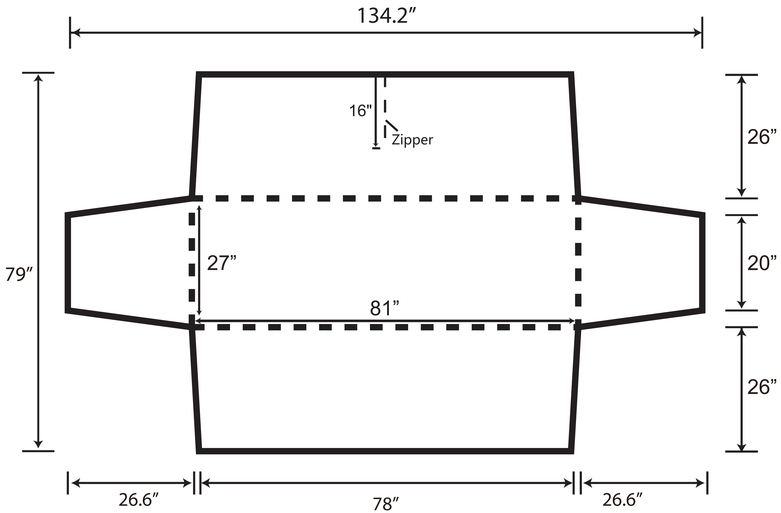

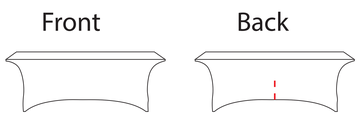

Zipper Back

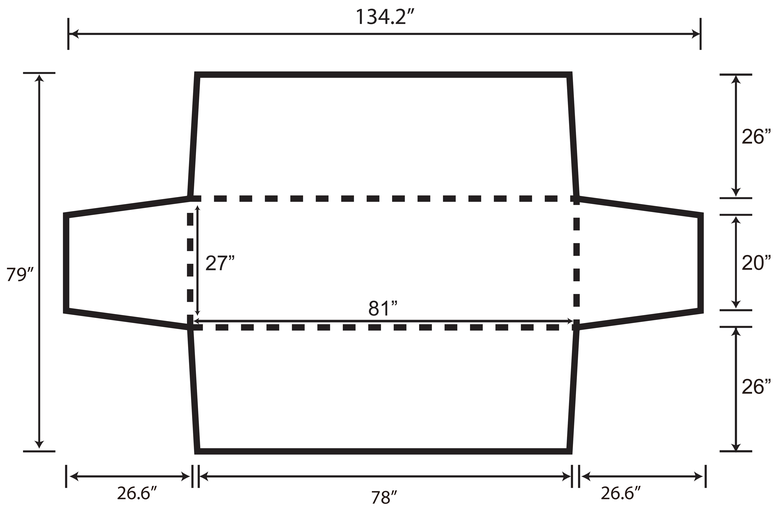

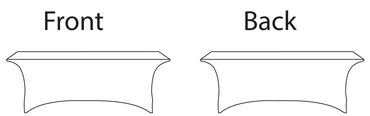

Closed Back

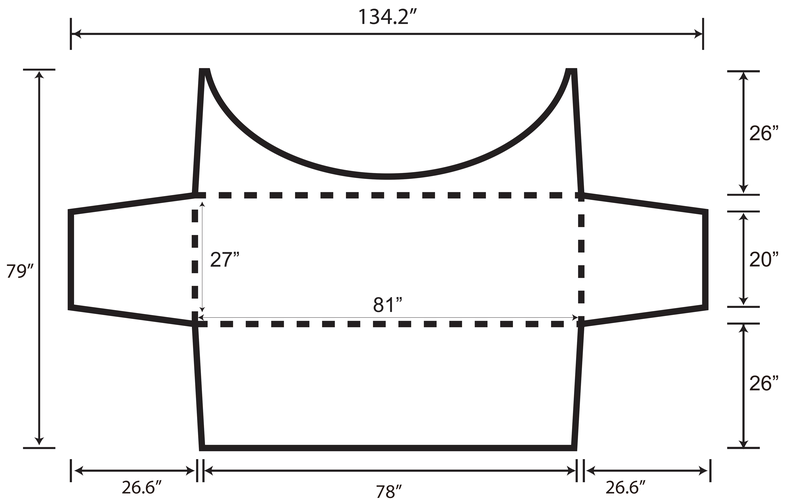

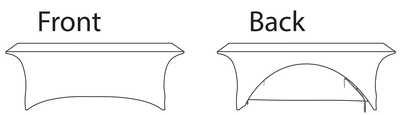

Open Back

The stretch table throw is constructed from five separate panels. Please note that the design may not align across each panel after sewing.

****Please convert text to outlines****

Template ratio - 1:4

Due to the nature of the fabric and weather conditions, we cannot guarantee or predict how long the fabric and color will last in an ourdoor environment

ATTENTION:

- Files to be supplied as vector PDF , AI , EPS .
- Files can be supplied at 100%, 50% or 25% the correct proportions are important.
- Please ensure all logos and text are within the safe guide to prevent any cropping.
- All text needs to be converted to paths/outlines.
- Logos should be imported/placed as vector and must be in CMYK / pantone.
- Photographic images should be supplied at 100dpi at finished size.
- No bleed required.
- We can match PANTONE C colours but NOT PANTONE U.